2020-06-06

A tunable bandwidth 6th-order active low-pass filter in 0.18 um CMOS technology

Kristina Nikolić, Jelena Radić

IEEE

A tunable bandwidth 6th-order active low-pass filter in 0.18 um CMOS technology

Kristina Nikolić, Jelena Radić
Department of Power, Electronic and Telecommunication Engineering,
Faculty of Technical Sciences, University of Novi Sad,
Novi Sad, Serbia,
kristinanikolic@uns.ac.rs, jelenar_@uns.ac.rs

***Abstract*—In this paper, a tunable bandwidth 6th-order active Butterworth low-pass filter has been designed in 0.18 um UMC CMOS technology. The topology consists of three second-order filters designed by using the Sallen-Key topology. The standard two-stage operation amplifier with Miller compensation capacitor is utilized as an operation amplifier stage in 2nd-order Butterworth low-pass filter. The cutoff frequency (3dB bandwidth) can be adjusted from 22 kHz to 52 kHz with a step value of 10 kHz by using a programmable capacitor bank. The post-layout simulation results show that for each cutoff frequency value, the designed tunable low-pass filter has a maximum passband attenuation of 11.53 mdB and a minimum stopband attenuation of 50 dB. The power consumption of designed active filter is 2.24 mW for a 1.8 V power supply. It achieves an in-band integrated input-referred noise of 130.502 uVrms and occupies active area of 0.65 mm^2.**

Keywords—CMOS technology, low-pass filter, operational amplifier, RC-active filter, tunable bandwidth.

I. INTRODUCTION

The CMOS continuous-time filters have widely discussed and investigated in the literature. Although digital systems are getting more attention by the market and researches nowadays, analog circuits such as the active filters are still the essential building blocks of mixed-signal integrated circuits systems, like wireless transceiver systems, sensors, etc. [1]. Analog filters are widely used for antialiasing before (after) the A/D (D/A) circuit, [1], [2]. In wearable biomedical devices with energy harvesting and high power efficiency, a continuous low-pass filter is a critical part enabling out-of-band noise and interference filtering [3]. As modern transceivers should work with several different wireless communication standards having different requirements for carrier frequency, channel, bandwidth, and sensitivity, they have to provide flexible solutions to meet the different specifications [4]. This means that a tunable filter bandwidth is required to employ the available frequency bands.

The two major concerns in design of a wideband LPF are the selection of filter prototype (usually Butterworth or Chebyshev) and topology (Gm-C, active-RC or switched capacitor filters), [4]. The Butterworth filter provides a maximally flat characteristic in the passband of a filter, i.e. characteristic that has no ripples. It also has low in-band amplitude and phase distortion, and an excellent rejection of out-of-band noise and interference [5]. The disadvantage of this approximation is wide transition area. Active-RC filter offers simpler implementation, much higher linearity and wider dynamic range specifications and can achieve some performance such as channel selection and out-of-band interferes injections [5], [6].

In this paper, a tunable bandwidth 6th-order active Butterworth low-pass filter is proposed. The Sallen-Key topology was chosen for the 2nd-order filter design primarily because of its simplicity, but also due to the possibility of designing higher-order filters by simple cascading.

This paper is organized as follows. The first part of this paper focuses on design of the selected two-stage operational amplifier topology, Section II. Section III shows the design of a low-pass (LP) filter using the previously described operational amplifier. Finally, in section IV conclusions are made.

II. TWO-STAGE OPERATIONAL AMPLIFIER DESIGN

Fig. 1 shows a schematic of a two-stage operational amplifier designed in 0.18 um UMC CMOS technology. The first stage (transistors M1-M5) is a differential amplifier with single-ended output that provides high gain, and the second stage (transistors M7-M8) is a common source amplifier that provides a higher output voltage range and additional increase in gain. The initial dimensions of the transistors and the values of the circuit components were calculated based on the procedures presented in [7].

The simulation results showed that the operational amplifier has better performance if the two stages have separate polarization circuits (current mirror stages consisting of transistors M5-M6, and M8-M9) due to the limitations in available transistor models (dimensions) in used technology. Therefore, the optimal polarization could not be achieved by using the same current reference.

Numerous simulations and parametric analysis provide optimal transistor dimensions and component values that are shown in Table I. All the transistors in the designed operational amplifier have channel length of 0.36 um to minimize the channel length modulation effect.

TABLE I. OPTIMAL COMPONENT VALUES OF TWO-STAGE OPERATIONAL AMPLIFIER

Component	*Value*	*Component*	*Value*
$W_{1,2}$ [µm]	225.0	W_8 [µm]	135.0
W_3 [µm]	75.0	W_9 [µm]	70.0
W_4 [µm]	75.0	R_{pol} [kΩ]	11.0
W_5 [µm]	130.0	R_{pol1} [kΩ]	28.40
W_6 [µm]	105.0	R_c [kΩ]	1.0
W_7 [µm]	90.0	C_c [pF]	3.65

This study has received funding from the European Union's Horizon 2020 research and innovation programme under grant agreement No. 854194 and supported in part by the Ministry of Education, Science and Technological Development, Republic of Serbia (project No. TR-32016).

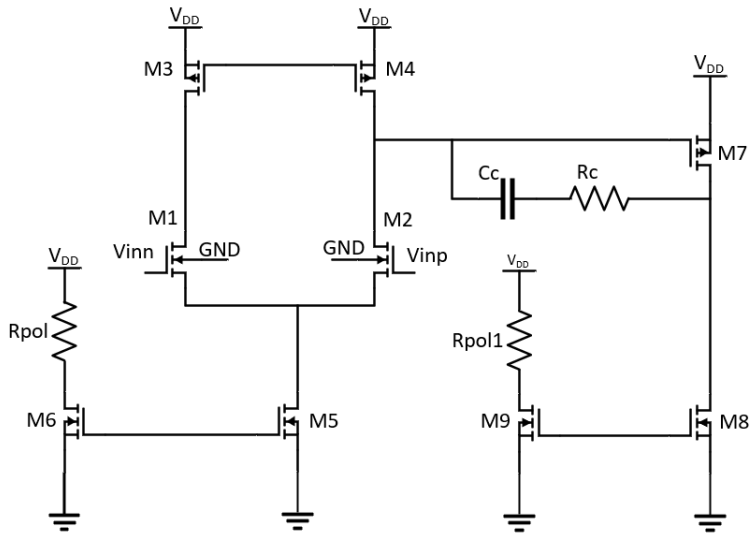

Fig. 1. Schematic of the proposed two-stage operational amplifier

A. *Operational amplifier simulation results*

A capacitive load of 1 pF connected to the output of the circuit is used during the simulation. Fig. 2 shows the input-output characteristic and the CMIR (common-mode input range) parameter including voltage values from 0.3 V to 1.7 V. The power consumption of the operation amplifier is 736.2 uW.

Input and output signals as results of the transient analysis are shown in Fig. 3. The ascending edge slew rate is 47.88 V/us and the descending edge slew rate is 20.53 V/us.

The amplitude and phase of the operational amplifier frequency response are shown in Figs. 4 and 5, respectively. The voltage gain at lower frequencies is 60.02 dB and the 3dB bandwidth is 60.55 kHz. The unity gain frequency of the designed operational amplifier has a value of 63.4 MHz, and the phase margin has a value of 70.7 ˚.

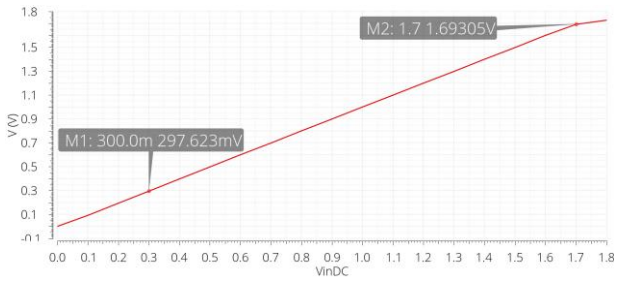

Fig. 2. Input-output characteristics (DC analysis)

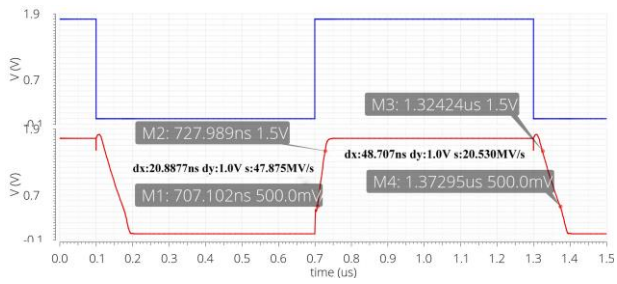

Fig. 3. Input and output signal as results of the transient analysis

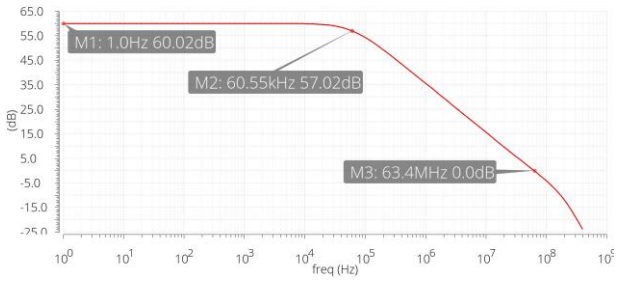

Fig. 4. Frequency response of the operational amplifier

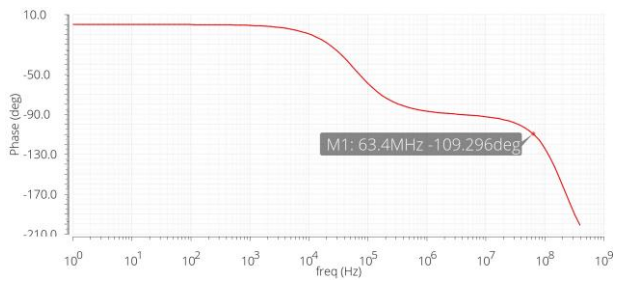

Fig. 5. Phase response of the operational amplifier

III. DESIGN OF ACTIVE LOW-PASS FILTER WITH TUNABLE BANDWIDTH

The proposed tunable bandwidth 6th order active Butterworth low-pass filter is shown in Fig. 6. The filter order (*n*) and the cutoff frequency (*fn*) are determined by using the *MATLAB* software package based on the desired specifications, as well as the coefficients of the filter transfer function that determine the initial values of the filter components. Since the filter order of 6 is required, it consists of three cascaded second-order filters designed by using the Sallen-Key topology. In order to obtain optimal values of circuit elements (summarized in Table II), numerous simulations and parametric analysis were performed. To provide the filter bandwidth tuning, a capacitor network, composed of capacitors C_{6_1}-C_{6_3}, whose value can be digitally controlled by three input bits (bit1, bit2, bit3), is used.

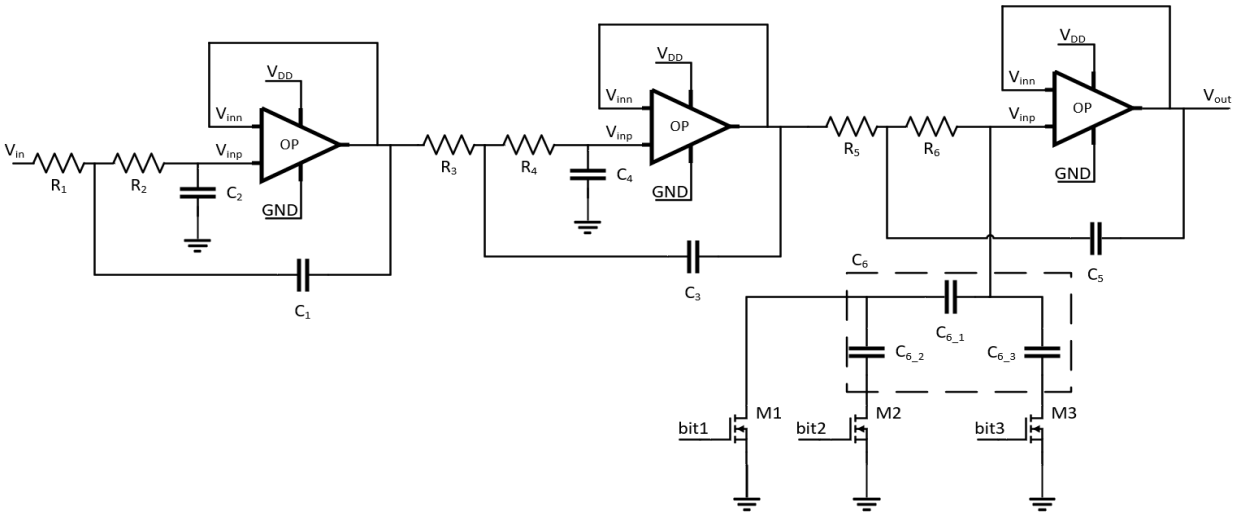

Fig. 6. Block diagram of tunable 6th order LP filter

TABLE II. OPTIMAL VALUES OF THE FILTER COMPONENTS

Component	*Value*	*Component*	*Value*
$R_{1,2}$ [MΩ]	1.20	$C_{3,5}$ [pF]	5.0
$R_{3,4}$ [MΩ]	1.0	C_4 [fF]	950.0
$R_{5,6}$ [kΩ]	800.0	C_{6_1} [pF]	3.90
C_1 [pF]	5.0	C_{6_2} [pF]	1.23
C_2 [fF]	500.0	C_{6_3} [pF]	1.4

The filter 3dB bandwidth can be tuned from 22 kHz to 52 kHz with 10 kHz increments for capacitor values and combinations of the three input bits given in Table III. The table shows that the increase of bandwidth is obtained by reducing the capacitance C_6 whose value is a result of a combination of capacitances C_{6_1}-C_{6_3}. When the combination "101" is given to the control bits, capacitance C_6 can be calculated as a parallel connection of capacitors C_{6_1} and C_{6_3}, and when the combination "100" is given, only the capacitor C_{6_1} is included. The combination "011" includes all three capacitors and total capacitance can be obtained as a parallel connection of capacitance C_{6_3}, and a serial connection of capacitances C_{6_1} and C_{6_2}. The last combination is "010" and the total capacitance is calculated as a serial connection of C_{6_1} and C_{6_2}.

TABLE III. DEPENDENCE OF THE FILTER CUTOFF FREQUENCY AND THE EQUIVALENT C_6 CAPACITANCE ON COMBINATION OF CONTROL BITS

Combination bit1,bit2,bit3	*Cutoff frequency*	*Component*	*Value*
101 (or 111)	22 kHz	C_6 [pF]	5.30
100 (or 110)	32 kHz	C_6 [pF]	3.90
011	42 kHz	C_6 [pF]	2.63
010 (or 001)	52 kHz	C_6 [pF]	1.23

A. *Low-pass filter post-layout simulation results*

Fig. 7 shows a layout of the low-pass filter with tunable bandwidth. A capacitive load of 1 pF connected to the filter output is used during the simulation. Power consumption of the filter is 2.24 mW for a 1.8 V power supply. Fig. 8 shows the frequency response of the designed LP filter for different bandwidths. Marker M1 indicates a passband attenuation of 11.53 mdB. Markers M2 to M5 show the cutoff frequencies of the filter, which are changed from 22 kHz to 52 kHz with 10 kHz increments by using the appropriate combination of digital control bits.

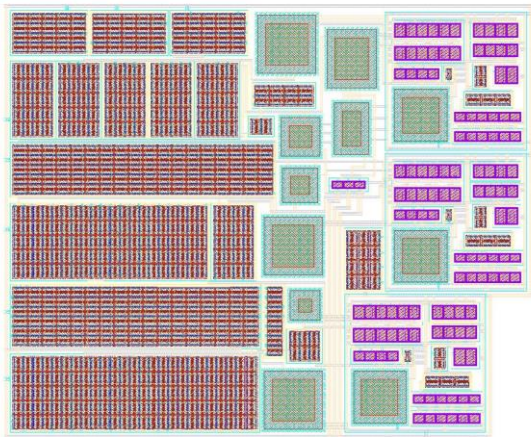

Fig. 7. Layout of the LP filter

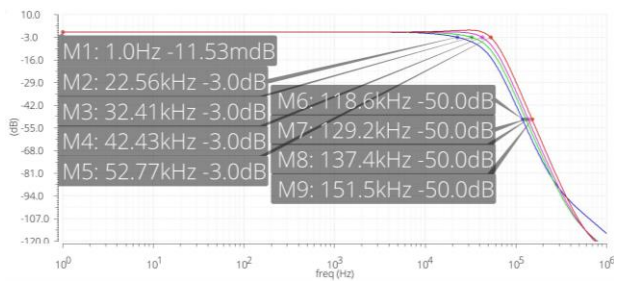

Fig. 8. Frequency response of LP filter for different bandwidth

TABLE IV. FILTER PERFORMANCE AND COMPARISON

Parameter	This work [b.]	[8][a.]	[9][a.]	[10][a.]
Type of filter	Butterworth	Chebyshev	Butterworth	/
Filter order	6	6	3	2
Topology	Sallen-Key	Active-RC	Biquad	Sallen-Key
Technology [um]	0.18	0.13	0.18	0.18
V_{supply} [V]	1.8	1.5	1.8	1.8
Gain [dB]	-11.53m	/	-2.9	-1
Bandwidth [Hz]	22k-52k	1M-10M	1G	10.1k
Attenuation in stopband [dB]	< -50	/	< -55	/
Power consumption [mW]	2.24	9.45	2.3	0.541
In-band input-referred noise [uV_{RMS}]	130.502	189.74	213	/

[a.] Simulation results
[b.] Post-layout simulation results

The end of the transition area and the beginning of the stopband represents the frequency at which attenuation has a value of 50 dB (based on specifications) and is indicated by markers M6 to M9 for each frequency response. It can be noticed that the frequency responses are maximally flat in the passband. The widths of transition bands are shown in Table IV and all the values are less than 100 kHz (the specification limit).

The results of the filter noise spectral density for each selected bandwidth are shown in Fig. 9. The marker indicates the maximum possible noise spectral density in the circuit obtained when the 52 kHz bandwidth is selected and its value is 572.29 nV/$\sqrt{Hz}$ corresponding to 130.502 uV_{RMS}.

The main performances of the designed low-pass filter and their comparisons with results found in the literature are presented in Table V. It can be noticed that the range of frequency tuning is smaller than ranges in [8], but frequency can be tuned with very small steps. In comparison to other works, the obtained DC gain in the passband is the highest. The power consumption and in-band input-referred noise in this paper is smaller than provided in [8]. The designed filter has very low power consumption compared to filters in other works, except in [10] whose disadvantage is fixed bandwidth of 10 kHz. The proposed filter has a very small in-band noise value and much smaller than reffered in other papers.

TABLE V. TRANSITION WIDTHS

Bandwidth [kHz]	*Start of stop band [kHz]*	*Transition width [kHz]*
22.56	118.6	96.04
32.41	129.2	96.79
42.43	137.4	94.97
52.77	151.5	98.73

Fig. 9. Noise spectral density of LP filter

IV. CONCLUSIONS

The Butterworth active tunable bandwidth low-pass filter is presented in this paper. The filter bandwidth can be easily tuned between 22 kHz and 52 kHz with small step of 10 kHz, while all the other characteristics remain the same. The cutoff frequency tuning is accomplished in a very simple way by using the capacitor network, whose equivalent value is digitally controlled, in one 2nd order filter stage. Based on very compact and simple Sallen-Key topology, the designed filter order can be simply increased by cascading the 2nd-order filter topologies. The main advantages of the designed filter are very small maximum attenuation in passband, maximally flat frequency response, very low power consumption and low in-band input-referred noise compared to the other published works.

REFERENCES

[1] F. Ciciotti, M. De Matteis, and A. Baschirotto, "A 0.9V 75MHz 2.8mW 4th-Order Analog Filter in CMOS-Bulk 28nm Technology," IEEE International Symposium on Circuits and Systems, May 2017.

[2] B. Razavi, RF Microelectronics, 2nd ed., Castleton, New York, USA, 2011.

[3] Z. Liu, Z. Shen, Y. Tan, H. Jiang, H. Li, J. Liu, H. Liao, "A 0.5-V Ultra-Low-Power Low-Pass Filter with a Bulk-Feedback Technique," IEEE International Symposium on Circuits and Systems, May 2019.

[4] S. Delshadpour, "A 5/10/20/40 MHz 5th Order Active-RC Chebychev LPF for 802.11abg IF Receiver in 0.18 um CMOS Technology," IEEE 20th Wireless and Microwave Technology Conference (WAMICON), April 2019.

[5] S. Kousai, M. Hamada, R. Ito, T. Itakura, "A 19.7 MHz, 5th Order Active-RC Chebyshev LPF for IEEE802.11n with Automatic Quality Factor Tuning Scheme," IEEE Asian Solid-State Circuits Conference, 2006, pp. 231- 234.

[6] L. Duan, G. Chen, R. Ma, M. Cao, B. Chi, "Highly Linear 0.9V 3rd-Order Acitve-RC Low Pass Filter in CMOS 28nm," IEEE International Conference on Electron Devices and Solid-State Circuits, June 2019.P.V. Ananda Mohan, VLSI Analog Filters, New York, USA, 2013.

[7] P. E. Allen, D. R. Holberg, CMOS Analog Circuit Design, Oxford University Press, 2002.

[8] X. Jin, F. F. Dai, A 6th Order Zero Capacitor Spread 1MHz-10MHz Tunble CMOS Active-RC Low Pass Filter with Fast Tuning Scheme, IEEE International Symposium on Circuits and Systems (ISCAS), August 2012.

[9] M. De Matteis, A. Baschirotto, "A Biquadratic Cell based on the Flipped-Source-Follower Circuit," IEEE Transactions on Circuits and Systems II: Express Briefs, vol. 64, no. 8, pp. 867-871, August 2017.

[10] R. Sokhi, A. Gupta, Sallen-Key Filters Using Operational Transconductance Amplifier, International Journal of Electronics and Communication Engineering and Technology (IJECET), vol. 8, no. 3, pp. 52-58, May-June 2017.